2STL1360
2STX1360

Low voltage fast-switching NPN power transistors

Features

- Very low collector-emitter saturation voltage
- High current gain characteristic
- Fast-switching speed

Applications

- Emergency lighting
- LED
- Voltage regulation
- Relay drive

Description

The devices are NPN transistors manufactured using new “PB-HCD” (power bipolar high current density) technology. The resulting transistor shows exceptional high gain performances coupled with very low saturation voltage.

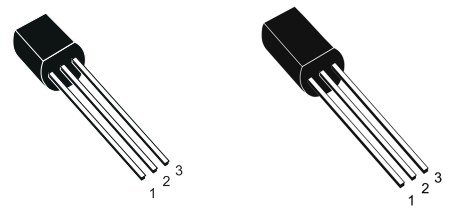

TO-92 TO-92L

Figure 1. Internal schematic diagram

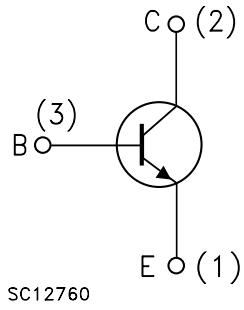

Table 1. Device summary

Order codes	Marking	Packages	Packaging
2STL1360	L1360	TO-92L	Bag
2STX1360	X1360	TO-92	Bag

1 Electrical ratings

Table 2. Absolute maximum ratings

Symbol	Parameter	Value		Unit
		2STX1360	2STL1360	
V_{CBO}	Collector-base voltage (I_E = 0)	80		V
V_{CEO}	Collector-emitter voltage (I_B = 0)	60		V
V_{EBO}	Emitter-base voltage (I_C = 0)	6		V
I_C	Collector current	3		A
I_{CM}	Collector peak current (t_P < 5 ms)	5		A
I_B	Base current	0.2		A
I_{BM}	Base peak current (t_P < 5 ms)	0.4		A
P_{TOT}	Total dissipation at T_{amb} = 25 °C	1	1.2	W
T_{STG}	Storage temperature	-65 to 150		°C
T_J	Max. operating junction temperature	150		°C

Table 3. Thermal data

Symbol	Parameter		Value		Unit
			TO-92	TO-92L	
R_{thJA}	Thermal resistance junction-ambient	max	125	104	°C/W

2 Electrical characteristics

T_{case} = 25 °C unless otherwise specified.

Table 4. Electrical characteristics

Symbol	Parameter	Test conditions	Min.	Typ.	Max.	Unit
I_{CBO}	Collector cut-off current (I_E = 0)	V_{CB} = 80 V			100	nA
I_{EBO}	Emitter cut-off current (I_C = 0)	V_{EB} = 6 V			100	nA
$V_{BE(on)}$	Base-emitter on voltage	V_{CE} = 2 V I_C = 100 mA	630	650	730	mV
$V_{CE(sat)}$ (1)	Collector-emitter saturation voltage	I_C = 2 A I_B = 100 mA I_C = 3 A I_B = 150 mA		130 180	300 500	mV mV
$V_{BE(sat)}$ (1)	Base-emitter saturation voltage	I_C = 2 A I_B = 100 mA		0.9	1.2	V
h_{FE} (1)	DC current gain	I_C = 0.1 A V_{CE} = 2 V I_C = 1 A V_{CE} = 2 V	80 160		 400	
	RESISTIVE LOAD					
t_d	Delay time	V_{CC} = 10 V I_C = 3 A		17	20	ns
t_r	Rise time	$I_{B(on)}$ = - $I_{B(off)}$ = 300 mA		81	100	ns
t_s	Storage time	$V_{BE(off)}$ = - 5 V		620	720	ns
t_f	Fall time			54	65	ns
f_T	Transition frequency	I_C = 0.1 A V_{CE} = 10 V		130		MHz

1. Pulse test: pulse duration ≤ 300 µs, duty cycle ≤ 2 %

2.1 Electrical characteristics (curves)

Figure 2. DC current gain (V_{CE} = 5 V)

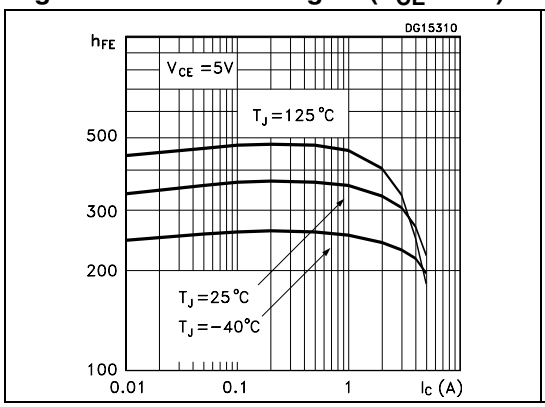

Figure 3. DC current gain (V_{CE} = 2 V)

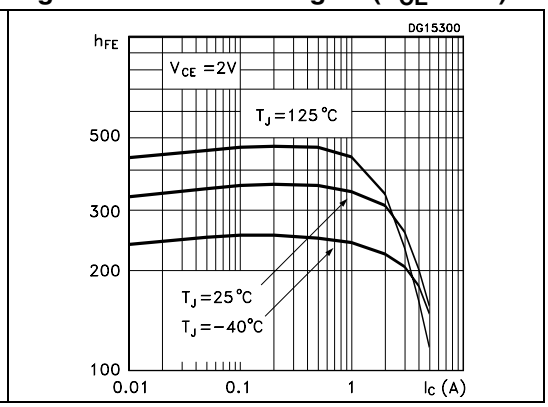

Figure 4. Collector-emitter saturation voltage

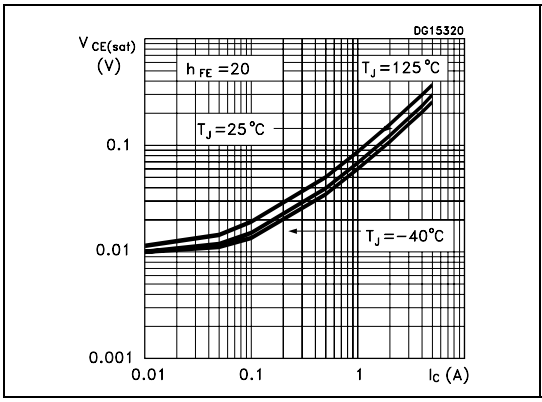

Figure 5. Base-emitter saturation voltage

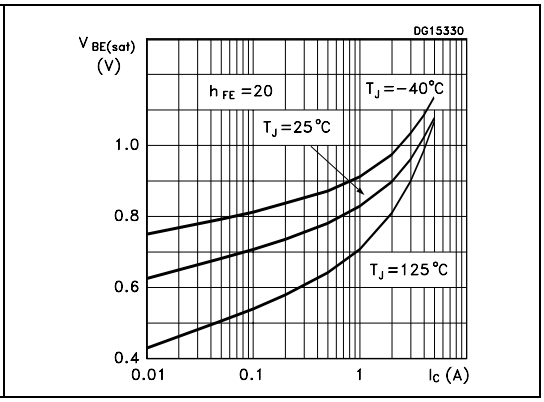

Figure 6. Resistive load switching time

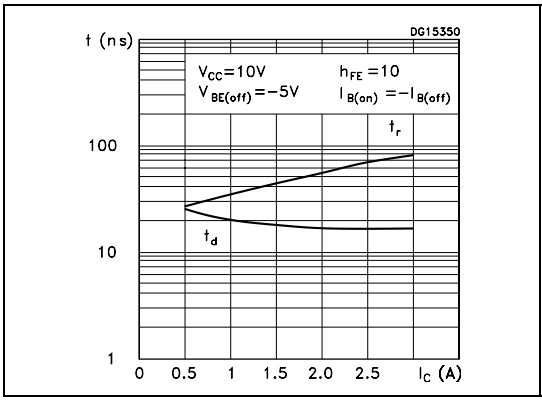

Figure 7. Resistive load switching time

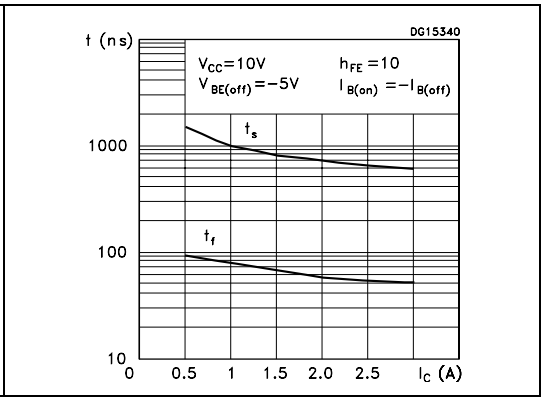

Figure 8. Capacitance

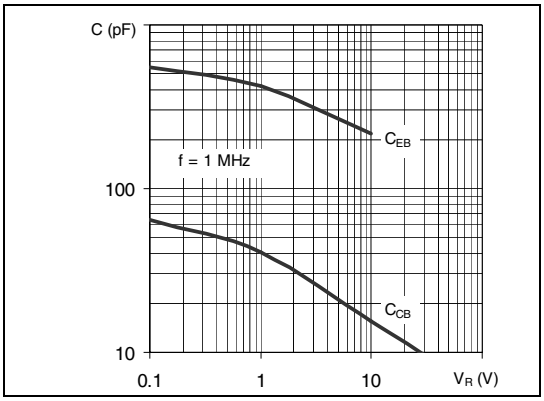

2.2 Test circuit

Figure 9. Resistive load switching test circuit

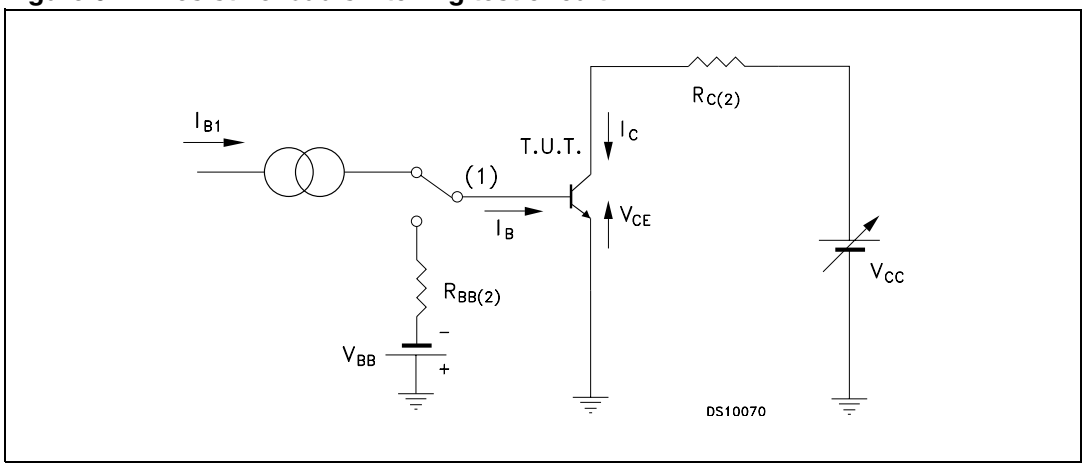

1. Fast electronic switch
2. Non-inductive resistor

3 Package mechanical data

In order to meet environmental requirements, ST offers these devices in different grades of ECOPACK® packages, depending on their level of environmental compliance. ECOPACK® specifications, grade definitions and product status are available at: *www.st.com*. ECOPACK® is an ST trademark.

TO-92 bulk shipment mechanical data

DIM.	mm.		
	MIN.	TYP	MAX.
A	4.32		4.95
b	0.36		0.51
D	4.45		4.95
E	3.30		3.94
e	2.41		2.67
e1	1.14		1.40
L	12.70		15.49
R	2.16		2.41
S1	0.92		1.52
W	0.41		0.56
V		5°	

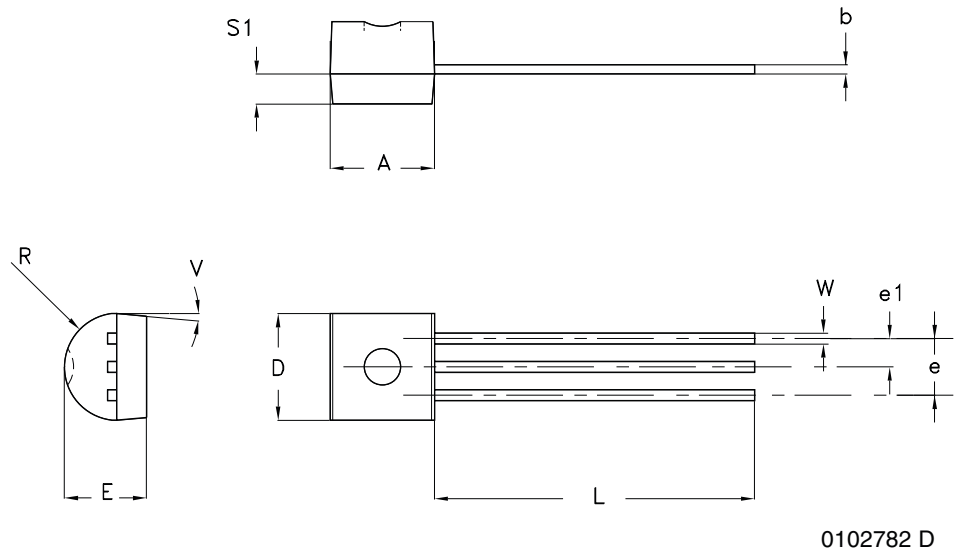

TO-92L MECHANICAL DATA

DIM.	mm.		
	MIN.	TYP	MAX.
A	7.80		8.20
b	0.35		0.45
D	4.70		5.10
D1		4	
E	3.70		4.10
e	2.44		2.64
e1		1.27	
L	13.30		14.30
S1	1.28		1.58
W	0.35		0.55

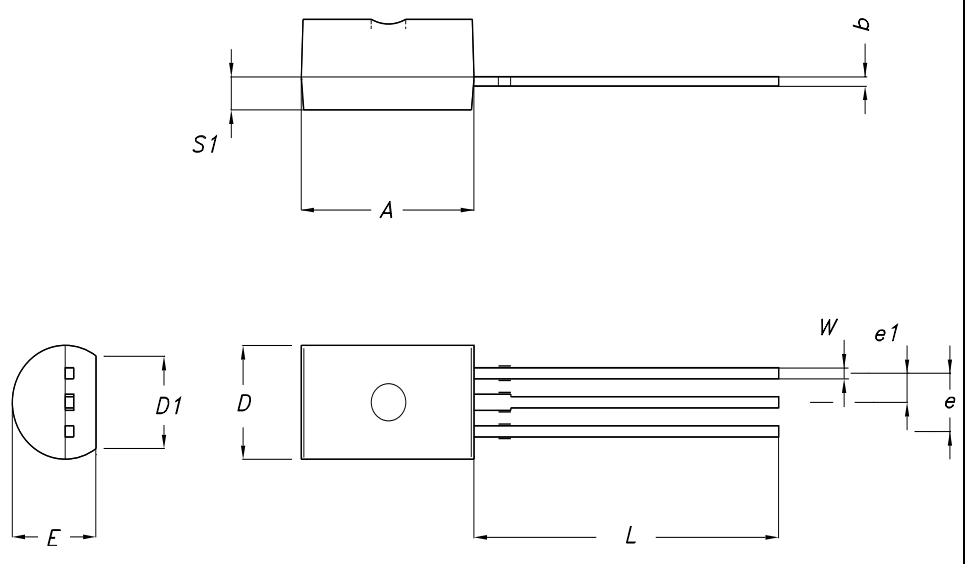

4 Revision history

Table 5. Document revision history

Date	Revision	Changes
20-Oct-2006	1	Initial release
16-Jul-2007	2	Added figures 2, 3, 4, 5, 6, 7 and 8
29-Oct-2009	3	Updated *Figure 8 on page 4* and TO-92 package mechanical data

Please Read Carefully:

Information in this document is provided solely in connection with ST products. STMicroelectronics NV and its subsidiaries (“ST”) reserve the right to make changes, corrections, modifications or improvements, to this document, and the products and services described herein at any time, without notice.

All ST products are sold pursuant to ST’s terms and conditions of sale.

Purchasers are solely responsible for the choice, selection and use of the ST products and services described herein, and ST assumes no liability whatsoever relating to the choice, selection or use of the ST products and services described herein.

No license, express or implied, by estoppel or otherwise, to any intellectual property rights is granted under this document. If any part of this document refers to any third party products or services it shall not be deemed a license grant by ST for the use of such third party products or services, or any intellectual property contained therein or considered as a warranty covering the use in any manner whatsoever of such third party products or services or any intellectual property contained therein.

UNLESS OTHERWISE SET FORTH IN ST’S TERMS AND CONDITIONS OF SALE ST DISCLAIMS ANY EXPRESS OR IMPLIED WARRANTY WITH RESPECT TO THE USE AND/OR SALE OF ST PRODUCTS INCLUDING WITHOUT LIMITATION IMPLIED WARRANTIES OF MERCHANTABILITY, FITNESS FOR A PARTICULAR PURPOSE (AND THEIR EQUIVALENTS UNDER THE LAWS OF ANY JURISDICTION), OR INFRINGEMENT OF ANY PATENT, COPYRIGHT OR OTHER INTELLECTUAL PROPERTY RIGHT.

UNLESS EXPRESSLY APPROVED IN WRITING BY AN AUTHORIZED ST REPRESENTATIVE, ST PRODUCTS ARE NOT RECOMMENDED, AUTHORIZED OR WARRANTED FOR USE IN MILITARY, AIR CRAFT, SPACE, LIFE SAVING, OR LIFE SUSTAINING APPLICATIONS, NOR IN PRODUCTS OR SYSTEMS WHERE FAILURE OR MALFUNCTION MAY RESULT IN PERSONAL INJURY, DEATH, OR SEVERE PROPERTY OR ENVIRONMENTAL DAMAGE. ST PRODUCTS WHICH ARE NOT SPECIFIED AS "AUTOMOTIVE GRADE" MAY ONLY BE USED IN AUTOMOTIVE APPLICATIONS AT USER’S OWN RISK.

Resale of ST products with provisions different from the statements and/or technical features set forth in this document shall immediately void any warranty granted by ST for the ST product or service described herein and shall not create or extend in any manner whatsoever, any liability of ST.

ST and the ST logo are trademarks or registered trademarks of ST in various countries.

Information in this document supersedes and replaces all information previously supplied.

The ST logo is a registered trademark of STMicroelectronics. All other names are the property of their respective owners.

© 2009 STMicroelectronics - All rights reserved

STMicroelectronics group of companies

Australia - Belgium - Brazil - Canada - China - Czech Republic - Finland - France - Germany - Hong Kong - India - Israel - Italy - Japan - Malaysia - Malta - Morocco - Philippines - Singapore - Spain - Sweden - Switzerland - United Kingdom - United States of America

www.st.com